PARTS LIST				
ITEM	QTY	PART NUMBER	DESCRIPTION	APPROX. WEIGHT
1	1	4848 Frame	TRAFFIC RATED FRAME, 48"x 48"	113 lbmass

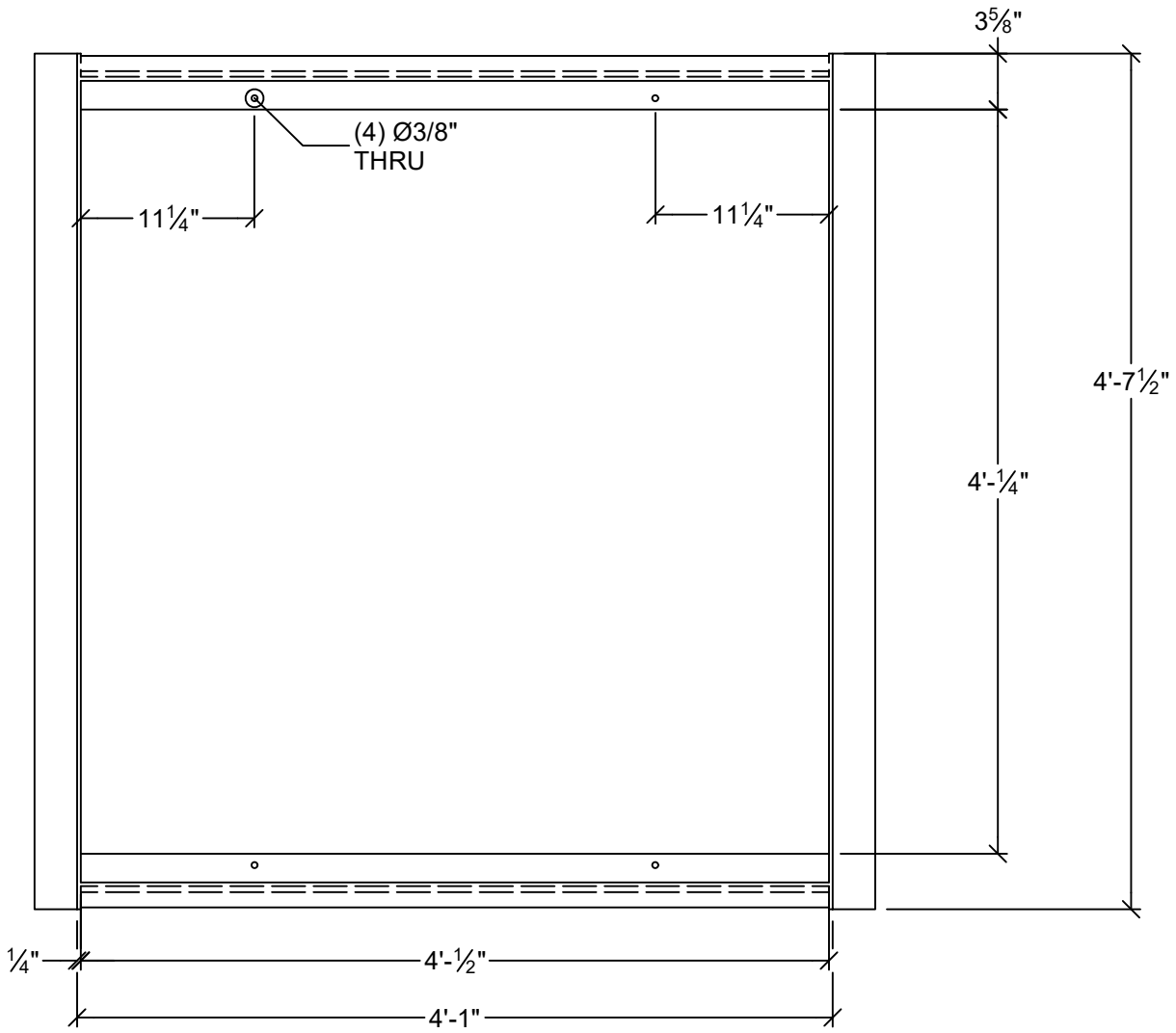

PLAN VIEW
SCALE 1" = 1'-0"
A

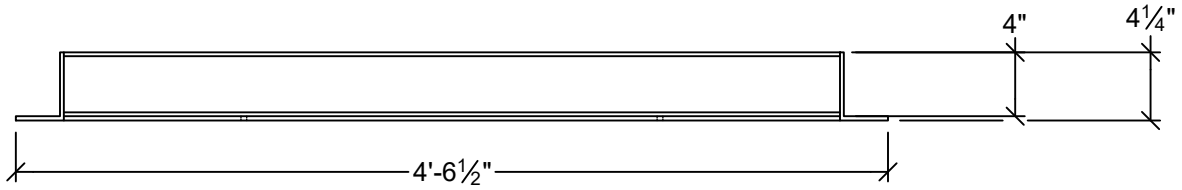

PROFILE VIEW
SCALE 1" = 1'-0"
B

NOTES:
1. MATERIALS AND MANUFACTURING METHODS SHALL CONFORM TO ASTM C-913 AND ASTM A-36.
2. FRAME SHALL MEET H-20 WHEEL LOADING.
3. FRAME SHALL BE GALVANIZED AFTER FABRICATION PER ASTM A-123.
4. FRAME TO BE SUPPLIED BY PRECON AND MANUFACTURED BY NIZHONI METALS.

240 W. LOS ANGELESE AVE. SIMI VALLEY, CA 93065
P: (805) 527-0841 F: (805) 584-0769,
WWW.PRE-CONPRODUCTS.COM

THE CONTENTS OF THESE DRAWINGS ARE THE PROPERTY OF PRECON PRODUCTS AND ARE PROPRIETARY AND CONFIDENTIAL. THESE DOCUMENTS SHALL NOT BE DISSEMINATED FOR ANY OTHER USE, WITHOUT THE WRITTEN CONSENT OF PRECON PRODUCTS. IF YOU RECEIVE THESE DRAWINGS IN ERROR, RETURN TO SENDER WITHOUT READING, COPYING OR DISCLOSING THE CONTENTS.

DRAWN BY: N.Scop

DATE: 10/9/2025

TILTE: 48" x 48" STEEL FRAME

SHEETS: 1 OF 1

RELEASED: 10/9/25 KS

LOCATION:T:\Drawings\Vault\DESIGNS\COVER AND FRAMES\Standard\48x48 Frame 2025.dwg